AQUE DOWNLIGHT

The Aque is a modern downlight luminaire suitable for various ceiling installations. With an IP65 rating, this downlight is perfect for applications in damp environments and wet areas including bathrooms, laundries and under eaves.

Applications: Hotels, offices, supermarkets, educational spaces, corridors, stairways etc.

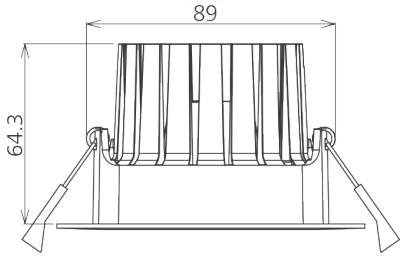

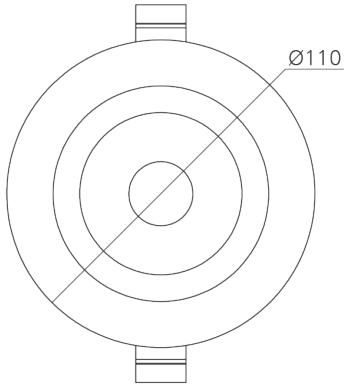

Ø93mm

PRODUCT FEATURES

- Light output, up to 1,210Lm
- Efficacy (up to 93Lm/W) delivering superior energy efficiency
- Ideal for all applications
- Life time 50,000 hours (L70)
- Colour rendering exceeds CRI:80 (CRI:90 available on request)
- Beam Angle: 30°/60°
- Protection rated IP65
- CCT options: 3000K/4000K
- Available colours: black and white
- Dimming options on request
- Five Year Warranty

IP 65 | IK 08 | CRI >80 | FIVE YEAR 5 WARRANTY

Model	Source	System Lumen	System Power	CCT	Beam Angle
DR-AQU-13-3K	CREE	904Lm	13W	3000K	30°/60°
DR-AQU-13-4K	CREE	1210Lm	13W	4000K	30°/60°

CRI	Material	Voltage	Colour	Dimming Options
>80	Aluminium	220-240V, 50Hz	BK / WH	Available on request

The information presented in this document is for information purposes only and does not constitute any obligation on our part. We reserved the right to make technical and design changes at any time and without notice.

Photometrics

(standard beam angles, alternative available on request)

30° at 13W

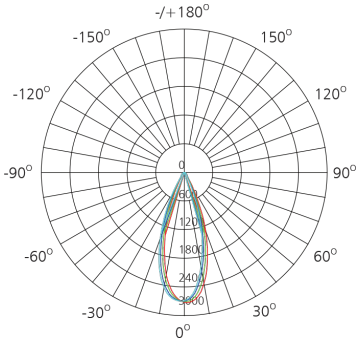

60° at 13W 3000K

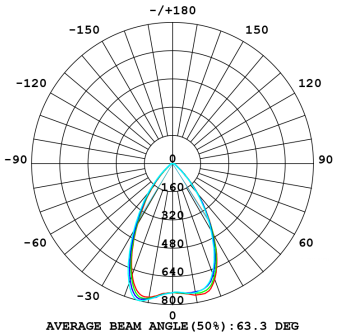

60° at 13W 4000K

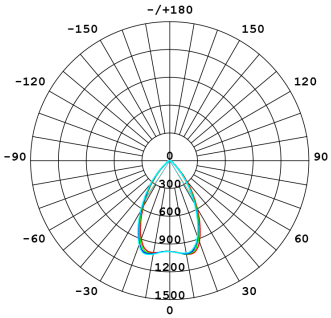

The information presented in this document is for information purposes only and does not constitute any obligation on our part. We reserved the right to make technical and design changes at any time and without notice.