ISABEL SR-EC15

Isabel is a compact luminaire for lower level and more precise accenting. Available in fixed or gimbal and to suit either 75mm or 85mm apertures, and with a selection of narrower beam settings they are perfect for homing in and highlighting key elements of your design.

Energy efficiency is a key component of our product focus and Isabel will ensure significant energy savings over traditional solutions. Of course, CCT colours and a glass diffuser are optional.

Phase dimmable with 0-10V and DALI available upon request.

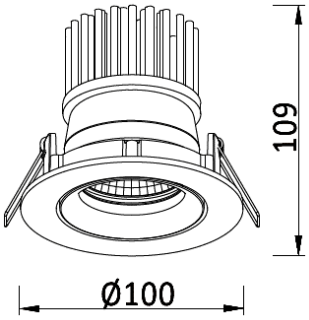

PRODUCT FEATURES

- Light output, up to 1,000Lm
- Efficacy (up to 62Lm/W) delivering superior energy efficiency
- Ideal for all commercial applications
- Life time 50,000 hours at 70% lumen maintenance
- Colour rendering exceeds CRI:90
- Beam Angle: 22°/31°/38°
- CCT options 3000K/4000K/5000K
- Available colours black, white and silver
- Dimming options on request
- Flex and plug or direct connection
- Five Year Warranty

LED CE CCC CRI >90 IP 20 FIVE YEAR 5 WARRANTY

Cut out Ø85 **Dimensions** Ø100x109mm

Model	Source	Lumen Output	System Power	CCT	Beam Angle
LPA-SR-EC15-94K	CREE	500Lm	9W	4000K	22°/31°/38°
LPA-SR-EC15-164K	CREE	1000Lm	16W	4000K	22°/31°/38°
CRI	**Driver**	**Material**	**Voltage**	**Colour**	**Dimming**
>90	TRIDONIC	Aluminium	110v-277v	BK / WH / SIL	TRIAC / 0-10V / DALI

Alternative colour temperatures available on request.

ISABEL SR-EC15

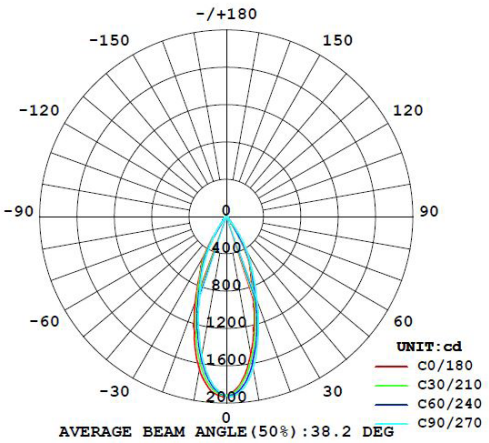

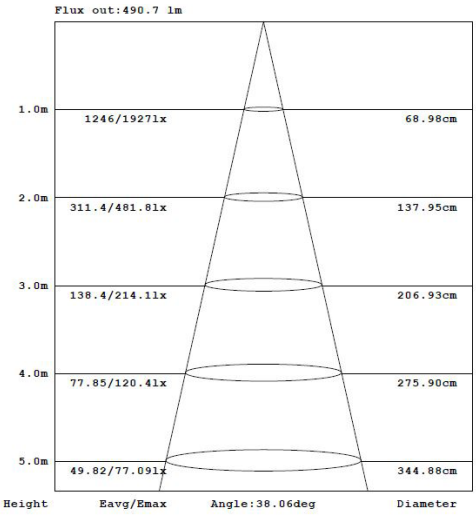

Enquire for availability of optional beam angles.

Physical	
Height:	109mm
Diameter:	100mm
Weight:	0.42kg
Control and Programming	
Dimming:	TRIAC / 0-10V / DALI
Construction	
Fixture:	Aluminium
Fixture colour:	BK / WH / SIL
Lens:	38°
Impact rating:	IK07
Protection rating:	IP20
Connection	
Power connection:	Flex and plug
Output	
Luminous Flux:	500Lm / 1000Lm
Efficacy:	55Lm/w / 62Lm/w
Beam Angle:	22°/31°/38°
CCT:	4000K
CRI:	>90
Quantity of Light source:	1
Lifetime:	50,000 hours at 70% lumen
Electrical	
Input Voltage:	110v-277v
LED Power:	8W / 13W
Driver Losses:	1W / 3W
Total Power:	9W / 16W
Power Factor:	0.92
Total Harmonic Distortion:	≤15%
Thermal	
Cooling:	Conduction
Operating Range Tc:	-20...+50
Humidity (non-condensing):	10-90%
Run Temperature Teq:	<70ºC
Certificates	
EMC:	CISPR 15:2011 EN55015:2013 EN61547:2009 EN61000-3-2:2014 EN61000-3-3:2013
Electrical Safety:	AS/NZS 60598.1:2013 AS/NZS 60598.2.1:2014 EN60598-2-2:2012 EN60598-1:2015