TALF PL-TPP22-22

LED panels revolutionised lighting in commercial and retail spaces and our market leading products and options are ready to meet your every application. Our range of size and illumination levels and the standard and optional features we offer reflect our focus on flexibility; a flexibility that ensures the best lighting outcome for every client.

Multiple power ratings in the key sizes adds simplicity to product selection ensuring optimum energy efficiency. Our prismatic diffuser delivers low glare and our LED selection ensures excellent colour rendering to further enhance the comfort and efficiency of the lit space.

Applications: Offices, corporate, retail, heath services, schools

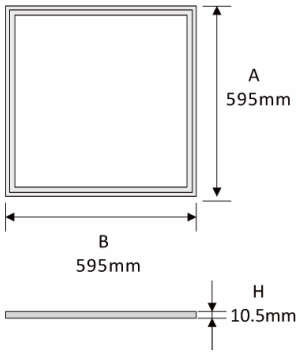

PRODUCT FEATURES

- Light output, up to 2,700Lm.
- Efficacy (up to 123Lm/W) delivering superior energy efficiency
- Ideal for residential, office and commercial applications
- Life time 50,000 hours (L70)
- Colour rendering exceeds CRI:80
- Beam Angle: 75°
- CCT options 4000K/6000K
- Protection rating IP40
- Low glare (UGR<19)
- Sizes to fit all standard TBar ceilings
- Plasterboard mount frame accessory
- Dimming options on request
- Direct connection
- Five Year Warranty

Dimensions 595x595x10.5mm

Model	Source	Lumen Output	System Power	CCT	Beam Angle
LPA-PL-TPP22-224K	LG	2700Lm	22W	4000K	75°
LPA-PL-TPP22-226K	LG	2700Lm	22W	6000K	75°
CRI	**Driver**	**Material**	**Voltage**	**Colour**	**Dimming**
>80	OSRAM	Aluminium	220-240VAC	WH	DALI dimmable option

Alternative colour temperatures available on request.

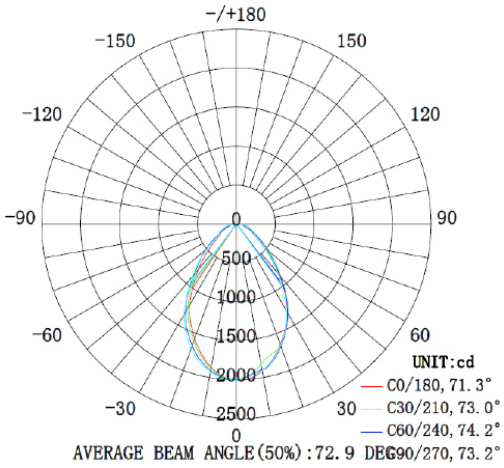

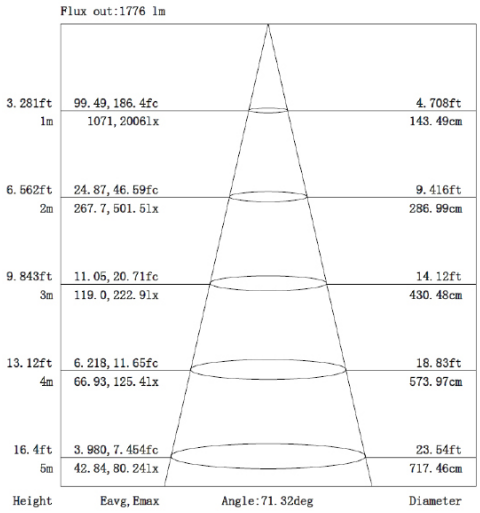

Alternative beam angles available on request.

TALF PL-TPP22-22

Physical	
Height:	10.5mm
Diameter:	595mm
Weight:	5.60Kg
Control and Programming	
Dimming:	DALI dimmable option
Construction	
Fixture:	Aluminium
Fixture colour:	WH
Lens:	
Impact rating:	
Protection rating:	IP40
Connection	
Power connection:	Flex and plug
Output	
Luminous Flux:	2700Lm
Efficacy:	123Lm/W
Beam Angle:	75°
CCT:	4000K
CRI:	>80
Quantity of Light source:	132
Lifetime:	50,000 hours at 70% lumen
Electrical	
Input Voltage:	220-240VAC
LED Power:	19.14W
Driver Losses:	<13%
Total Power:	22W
Power Factor:	>0.9
Total Harmonic Distortion:	<10%
Thermal	
Cooling:	
Operating Range Tc:	-10°C – 40°C
Humidity (non-condensing):	
Run Temperature Teq:	
Certificates	
EMC:	CISPR 15:2011
Electrical Safety:	AS/NZS 60598.1:2013 AS/NZS 60598.2.1:2014